FULL MORTISE TEMPLATE PIVOT REINFORCED HINGES FOR DOORS WITH SQUARE EDGE HINGE STILES

Size: 5 x 4 1/2"

TOP HINGE - RIGHT HAND SHOWN LEFT HAND IS OPPOSITE

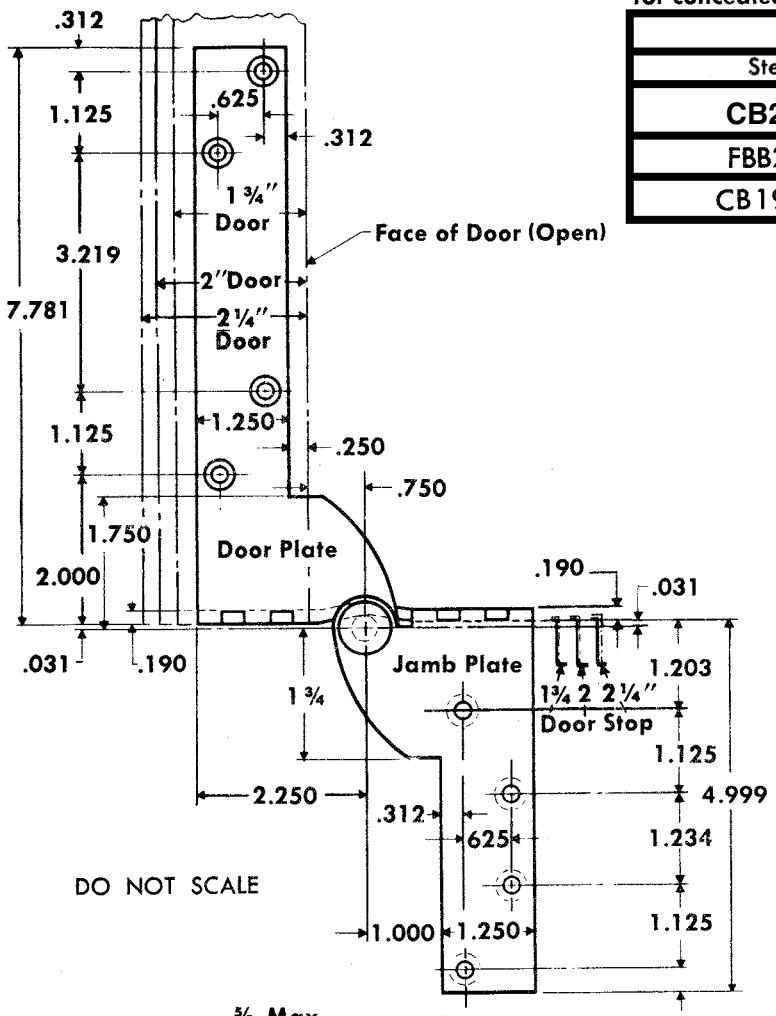

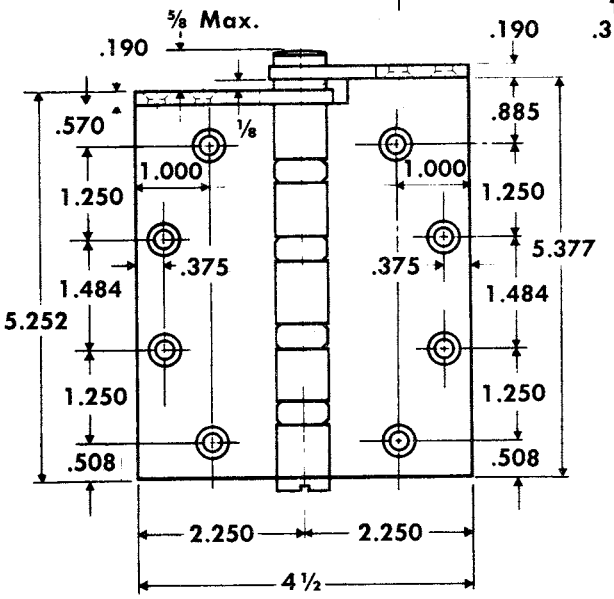

For use with door holders, closers and operators. See templates T50-07 and T50-10 for types which provide clearance for concealed devices.

SET CLASS NO.		Gauge of Metal
Steel	Nonferrous	
CB212	CB222	.190
FBB212	FBB222	.190
CB1908	CB1968	.190

Machine Screw Size — ½ x 12-24 F.H.
Wood Screw Size — 1 ½ x No. 12 F.H.

NOTE:
Backsets which apply when pivot-reinforced hinge is used on door thickness indicated and when the usual 1/16" stop clearance is desired.

Door Thickness	*Backset on Door	*Backset on Frame
1-3/4"	1/4"	5/16"
2"	1/2"	9/16"
2-1/4"	3/4"	13/16"

*** CAUTION: These Backsets Must Be Used On ALL Hinges In Set.**

CENTER AND BOTTOM HINGES

Size—5 x 4 ½
Gauge of Metal — .190

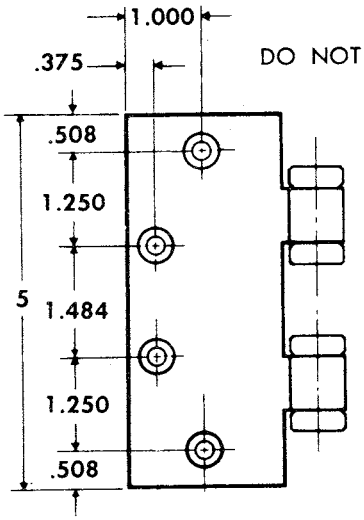

Machine Screw Size — ½ x 12-24 F.H.
Wood Screw Size — 1 ½ x No. 12 F.H.

STANLEY